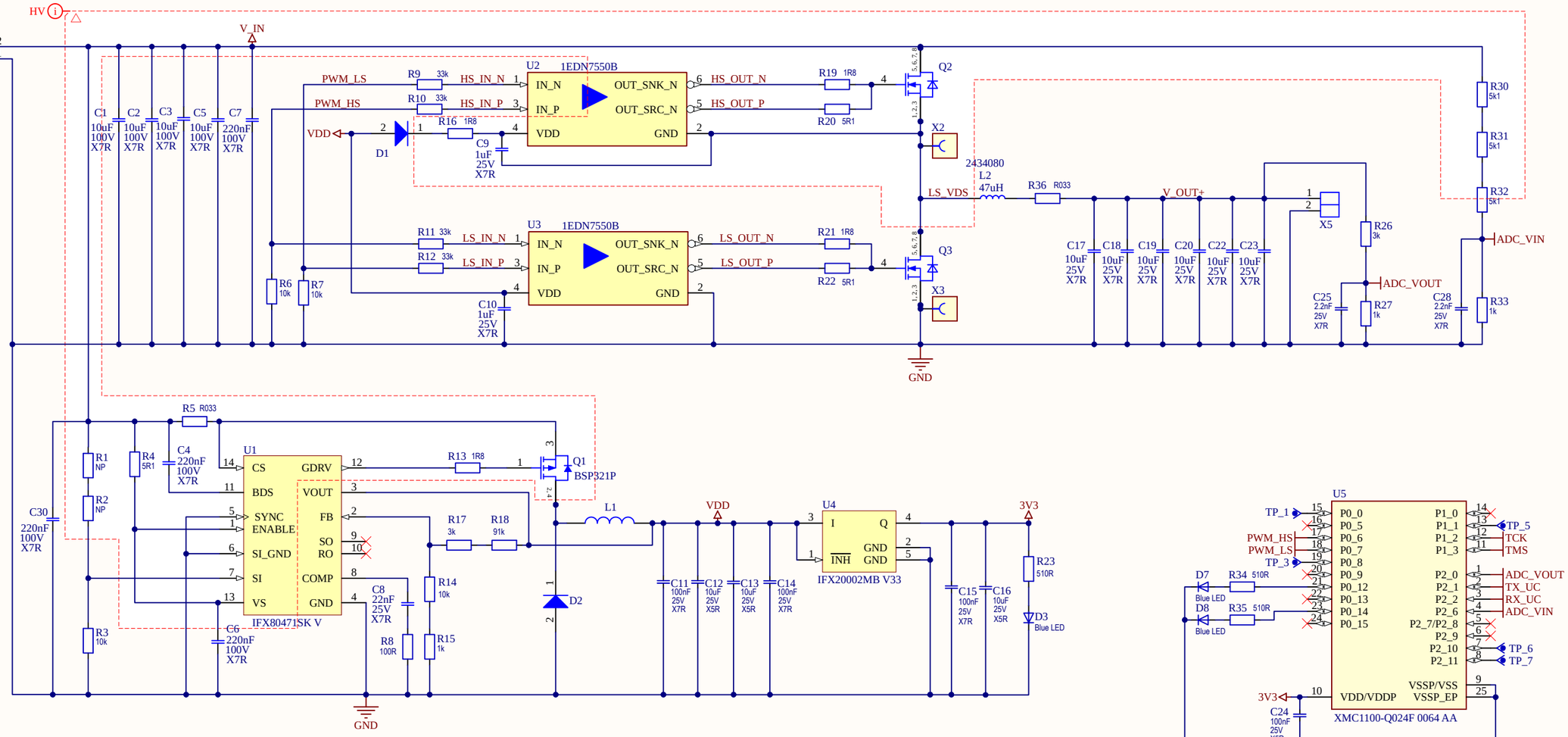

Title	LV BUCK TDI
Variant	[No Variations]
Author	IFAT PMM ACDC AE
Date	08.09.2021 Time: 16:57:40
Copyright	Infineon Technologies Austria AG
Sheet	* of *

IFAT PMM ACDC AE
Infineon Technologies Austria AG
Siemensstraße 2, 9500 Villach, Österreich